SHEET OF

NOTES:
1. ALL DIMENSION IN MM [INCH]
2. GENERAL TOLERANCE: X.X=±0.4
   X.XX=±0.25
3. TERM. NOS. FOR REF. ONLY
4. CONTACT RATING:
   SWITCHING: 150mA, 250V AC/DC,350mA, 110V AC/DC
   NON-SWITCHING: 5A
5. CONTACT MATERIAL: Cu Alloy w/Gold Flash over Silver Plate.
6. OPERATING FORCE: EXTRA LIGHT SPRING ACTION
7. OPERATING TEMP: -30° to 85°C
▲ 8. CIRCUIT SP: 12 POSITIONS, 30° INDEX.
9. DIELECTRIC STRENGTH: 1000V RMS min. @SEA LEVEL.
▲ 10. DESIGNATE MAJOR DIMENSIONS
11. STOP RING, LOCK NUT AND WASHER NOT SHOWN.

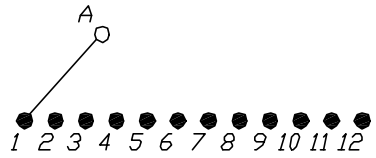

CONTACT CONFIGURATION
Timing: (BBM) Non-Shorting

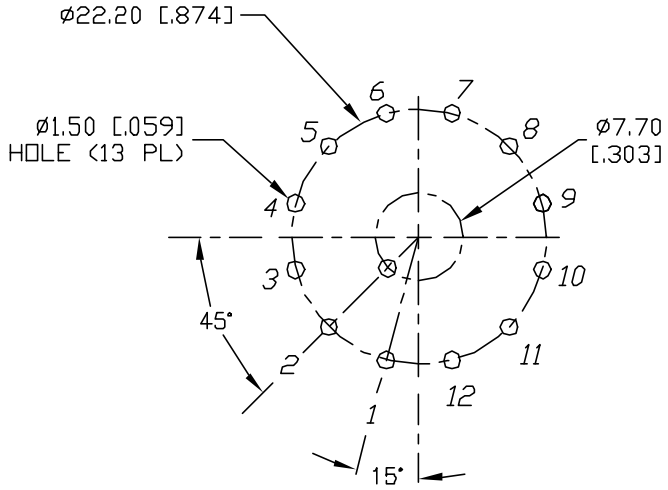

RECOMMENDED P.C.B. LAYOUT

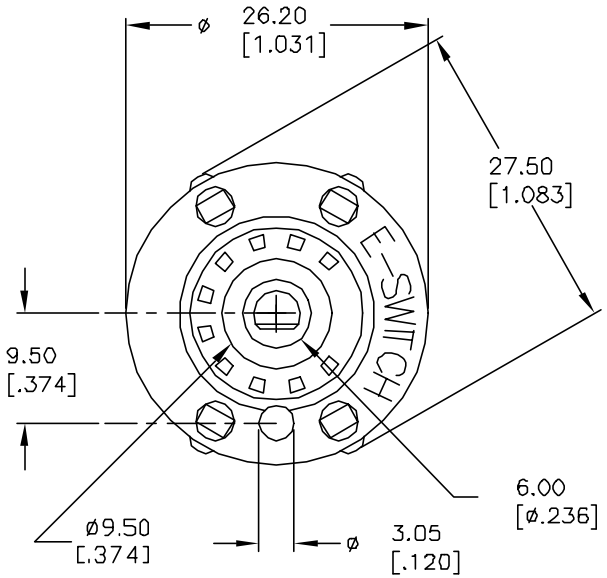

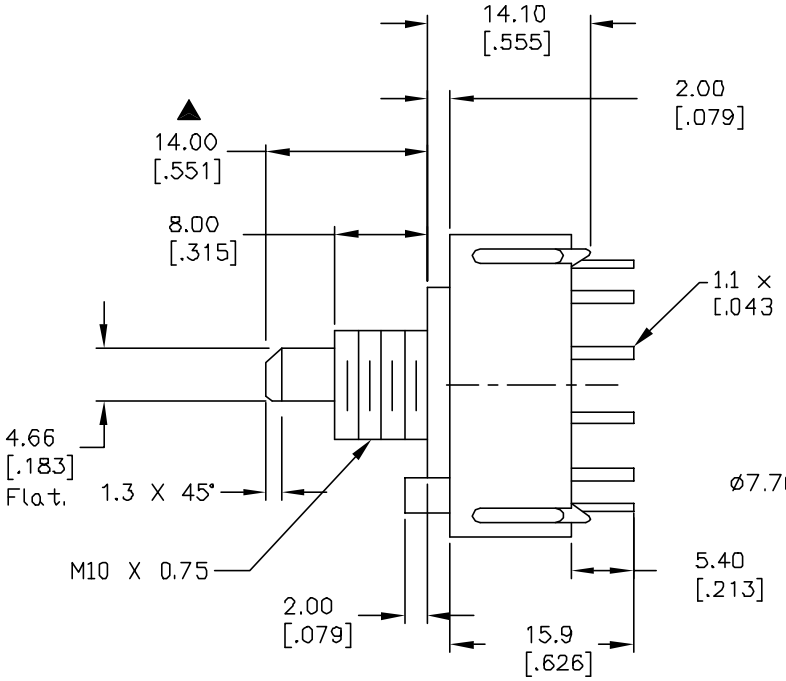

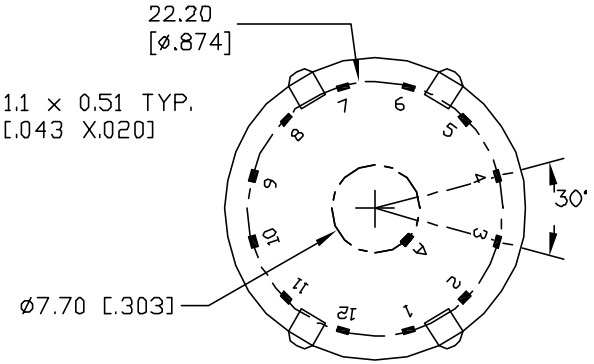

REV.	ECN No.	DESCRIPTION	DATE	CHKD
A	10814	RELEASED FOR PRODUCTION	5/29/01	CJB

THE INFORMATION CONTAINED IN THIS DOCUMENT IS PROPRIETARY TO E-SWITCH AND IS NOT TO BE COPIED OR TRANSFERRED

E-SWITCH®

TITLE KC3372 (CUSTOM)

SCALE	DATE	DR	DWG	REV
1.5:1	5/29/01	CJB	G510718	A